2026 DESIGN AND VERIFICATION™ DVCON CONFERENCE AND EXHIBITION INDIA

September 1-3, 2026
Radisson Blu, Marathahalli, Bangalore

Streaming YOLO + Parallel ViT Task Heatmapper on Genesys 2 FPGA

Unnath Chittimalla, Yash Anand, Abhirath Adamane

Team: CHIPMunks, Submission #509

International Institute of Information Technology, Bangalore

Table of Contents

I. Introduction
The Significance of SATAY-ViT
High-Level System Architecture
II. Background Research
III. Goal and Objectives
IV. Design Process
i. Proposed Design
1. The YOLO "Localizer" (SATAY-Based)
2. The ViT "Reasoner" (ME-ViT Based)
3. The VEGA "Brain" (CPU-Post Processing)
V. Conclusion <Uptill Stage 1>
VI. References

I. Introduction

Conventional object detection frameworks are historically **task-agnostic**. In a standard deployment, a detector identifies every "cup" or "knife" with equal priority, regardless of whether the user's goal is "serving wine" or "cutting bread." This leads to a "Semantic Gap" where the system lacks the contextual reasoning required for autonomous decision-making. The **COCO-Tasks** dataset addresses this by requiring systems to prioritize objects based on 14 specific functional tasks.

Our proposed architecture, **SATAY-ViT**, bridges this gap by implementing a **Dual-Pipeline Parallel Accelerator** on the Genesys 2 FPGA. We fuse the high-speed spatial detection of **YOLOv11n** with the semantic "reasoning" of a **Vision Transformer (ViT)**.

The Significance of SATAY-ViT

The core innovation lies in the **SATAY-inspired Streaming model**. Instead of attempting to fit the entire YOLO (2.6 MB) and ViT (2.4 MB) models into the limited 16 Mbit (2 MB) BRAM of the Kintex-7, we adopt a **weight-stationary, layer-pipelined approach**. In this design, only the weights of the current and subsequent layers are stored in BRAM at any given time. This reduces the peak memory footprint to just **354 KB (approximately 17% utilization)**, leaving sufficient headroom for the **VEGA RISC-V** orchestration core.

High-Level System Architecture

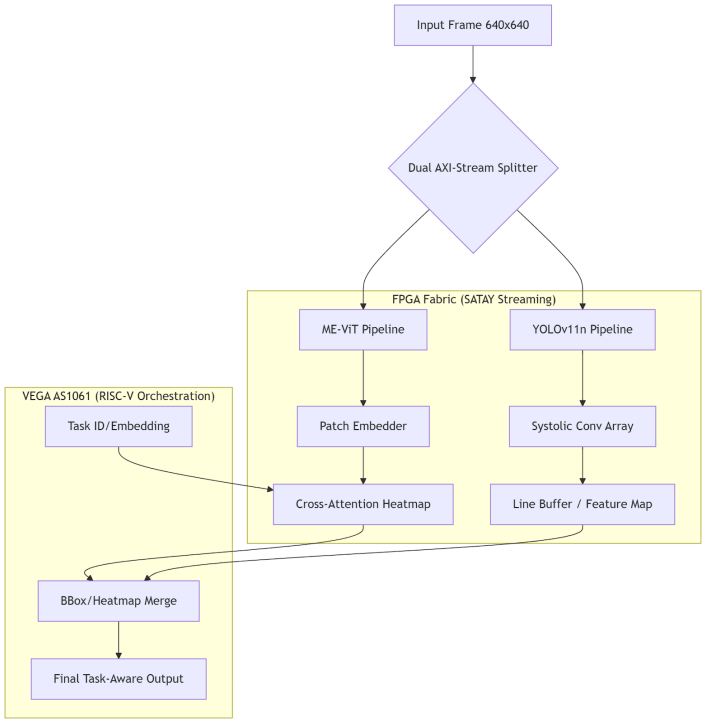

The system treats the incoming 640 X 640 pixel stream as a shared resource, bifurcating it into two independent hardware engines:

1. **The Detection Engine:** A Systolic Array-based **YOLOv11n** pipeline for bounding box localization.
2. **The Reasoning Engine:** A Cross-Attention ViT head that generates a **Task-Relevance Heatmap** using 512D text embeddings.

The design adheres to the **Streaming Architecture** tenets:

- **Pipeline Parallelism:** Layers are executed in a streaming fashion, allowing downstream layers to begin computation as soon as partial outputs from upstream layers become available
- **Temporal Weight Folding:** Weights are treated as transient residents of BRAM. The VEGA core manages a **Ping-Pong Buffer** that prefetches weights for Layer N+1 from DDR3 while the Systolic Array is busy with Layer N.
- **High Utilization Execution:** By balancing memory bandwidth and compute latency, the systolic array and DSP slices can achieve near-continuous utilization during active frame processing

II. Background Research

A. Task-Aware Object Detection (COCO-Tasks):

As established by Sawatzky et al. in the "What Object Should I Use?" study, traditional object detection benchmarks focus on category recognition (e.g., "Is this a chair?"). However, for autonomous agents, the utility of an object is context-dependent. The COCO-Tasks dataset provides a rigorous framework for this, annotating 40,000 images across 14 distinct tasks. Research indicates that standard detectors suffer an mAP drop when required to prioritize objects based on suitability. Their research leverages this by moving beyond simple classification to a Rank-and-Filter approach where text semantics (e.g., "drinking") guide the hardware's spatial attention.

B. YOLOv11n: State-of-the-Art Detection Model for Edge Deployments:

YOLOv11 represents a highly efficient real-time detection, specifically optimized for deployment on resource-limited hardware. Unlike its predecessors, YOLOv11n utilizes C3k2 blocks and a cross-stage partial (CSP) bottleneck architecture that maximizes gradient flow while minimizing parameter count.

- Architecture Efficiency: The model uses approximately 2.6 million parameters.

- FPGA Compatibility: The predominantly 3×3 and 1×1 convolutional layers are well suited for mapping onto the Systolic Matrix-Multiply Array provided in our design, enabling high-throughput inference without the overhead of complex non-linear operations.

C. Streaming Architectures (The SATAY Framework):

The development of SATAY-ViT is grounded in three pillars of modern computer vision and hardware acceleration: the shift toward task-driven reasoning, the evolution of real-time detection architectures, and the optimization of data movement in memory-constrained FPGA environments.

Our design adopts the principles of the SATAY (Streaming Architecture Toolflow) as detailed by Montgomerie-Corcoran et al. (2023). This research addresses the "Memory Wall" by treating the FPGA as a purely pipelined processor.

Some key ideas incorporated include:

- **Deep Pipelining**: Every layer of the network is implemented as an active hardware stage.
- **Temporal Folding**: SATAY research proves that by streaming weights from off-chip DDR3 to on-chip BRAM in a layer-wise fashion, one can run models that are 10× larger than the available on-chip memory.

- **High Utilization Interconnect:** By balancing AXI-Stream bandwidth with compute latency, the design achieves high utilization of the Kintex-7 DSP resources during active inference

D. Vision Transformers at the Edge (ME-ViT):

While YOLO provides spatial localization, transformer-based models excel at global context. Research into ME-ViT (Memory-Efficient ViT) and LeGrad shows that sparse attention mechanisms can generate precise "Relevance Heatmaps."

Sparse Attention: Rather than calculating all-to-all patch attention, ME-ViT focuses only on the top-N most relevant regions. This reduces memory traffic by 8×, making it feasible to run a transformer in parallel with YOLO on the Genesys 2 board.

Interpretability: By visualizing the cross-attention scores between the task embedding and the image patches, the system provides a "heat" map that logically justifies why an object was chosen for a task (e.g., highlighting the "blade" for a "cutting" task).

E. VEGA RISC-V Processor Ecosystem:

The VEGA AS1061 is an indigenously developed 64-bit RISC-V core (RV64IMAFDC) capable of high-level system orchestration. Its 6-stage in-order pipeline is optimized for handling the non-deterministic logic that FPGAs struggle with.

The core's support for **FreeRTOS** allows for deterministic interrupt handling, ensuring that the software-based "Task Fusion" stage never stalls the high-speed hardware pipeline. Programming and interconnect between soft core CPU and Accelerator is ensured via AXI-Streams and RISC-V compiled code flashed onto the SPI memory of the softcore CPU.

Background research into software/hardware co-design in this ecosystem suggests that Non-Maximum Suppression (NMS) and Softmax Ranking are most efficiently handled on a CPU to save FPGA Look-Up Tables (LUTs).

G. Optimization Strategies for Attention-Based Architectures:

Recent research highlights 6–7 critical axes for optimizing attention mechanisms on FPGAs (ACM 3549937), notably **Quantization** and **Approximation of Non-linear Functions**. Specifically, the implementation of **exponent-less Softmax**—replacing traditional transcendental operations with piecewise linear or power-of-two approximations significantly reduces BRAM overhead.

Furthermore, recent advancements in **Tiled Matrix Multiplication** (Li & Chen, 2025) provide a mechanism to map the multi-head attention (MHA) block onto systolic arrays by decomposing large matrices into persistent on-chip tiles. This ensures high data reuse and minimizes the memory-access bottleneck inherent in streaming transformer architectures.

III. Goal and Objectives

The primary **Goal** of this project is to implement a high-performance, task-aware object detection system on the **Genesys 2 FPGA** that accurately identifies and prioritizes objects based on 14 functional task descriptions. By leveraging the **SATAY** streaming philosophy, the system will achieve real-time throughput within the physical memory and power constraints of an edge device.

To accomplish this goal, the following **Objectives** have been defined:

Objective 1: High-Speed Streaming Inference

Achieve a consistent 25 FPS (40 ms latency) for the YOLOv11n backbone at 640 × 640 resolution. This will be realized by implementing a deeply pipelined systolic matrix-multiply array that processes pixel data in a continuous stream, ensuring the hardware never stalls for image I/O.

Objective 2: Memory-Efficient Weight Management

Overcome the 2.6 MiB weight-storage bottleneck by implementing a layer-wise weight streaming engine. The objective is to maintain a peak BRAM utilization of less than 10% (354 KB) at any given clock cycle by prefetching only the necessary weights for the active and subsequent layers from DDR3.

Objective 3: Task-Driven Semantic Alignment

Integrate a parallel **ME-ViT (Memory-Efficient Vision Transformer)** cross-attention head. This module will generate a 16 X 16 patch-relevance heatmap based on pre-stored 512D task embeddings, providing the "reasoning" layer required to distinguish between objects of the same class based on their utility (e.g., choosing a "cup" over a "glass" for a specific task).

Objective 4: Efficient HW/SW Partitioning on VEGA

Utilize the **VEGA AS1061 RISC-V** core for complex, non-linear post-processing. The CPU will handle **Non-Maximum Suppression (NMS)** and the final **Score Fusion** (multiplying YOLO confidence by ViT relevance). This preserves FPGA logic for parallel arithmetic while ensuring the software overhead remains below 5ms per frame.

Objective 5: Resource-Balanced Implementation

a. Resource: Deliver a design that maintains a balanced resource footprint on the Kintex-7 FPGA
b. Logic: Maintain conservative LUT utilization to ensure reliable timing closure at high operating frequencies.
c. Arithmetic: Use DSP resources efficiently to balance performance and power consumption.
d. Bandwidth: Minimize DDR3 bandwidth usage, demonstrating a sustainable "Data Motion" model suitable for edge-AI applications.

IV. Design Process

i. Problem Statement

The deployment of a task-aware Vision Transformer (ViT) and a YOLOv11n detector on the Genesys 2 FPGA presents two primary challenges:

1. **The Memory Wall:** The combined model weights (approx. 5.0 MB in INT8) and the input frame buffer (1.2 MB) exceed the available on-chip BRAM (2.0 MB) by **250%**. A conventional "Load-then-Execute" model would result in severe DDR3 thrashing and a frame rate below 2 FPS.
2. **The Semantic Gap:** Standard object detectors produce bounding boxes but cannot differentiate between functionally distinct objects of the same class (e.g., a "wine glass" vs. a "water glass") based on a textual task goal.

ii. Functional Specification

The system is defined as a real-time, task-conditioned edge processor. The primary constraint is maintaining a high frame rate while keeping the memory footprint small enough to fit into the Kintex-7's "Fast BRAM."

Table: Design Specifications

Parameter	**Specification**
Input	640 × 640 RGB (24-bit) @ 25 FPS
Task Input	4-bit Task ID (Selects 1 of 14 functional goals)
Logic Precision	INT8/Quantized (Weights & Activations, tuned from Vitis HLS ap_types and VAQF methodology)
Latency Target	< CPU and typical consumer GPU ms End-to-End
Power Budget	< CPU and typical consumer GPU (15W Maximum Estimated)

i. Proposed Design

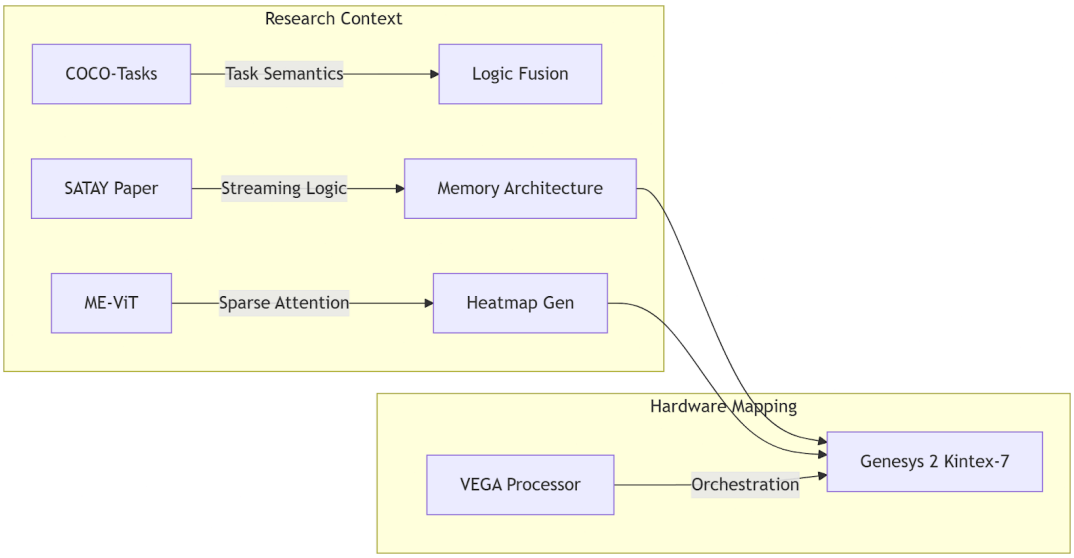

The architecture is built on the "Single-Load, Continuous-Stream" principle. We never store a whole image; we store **rows**. We never store the whole model; we store **layers**.

1. The YOLO "Localizer" (SATAY-Based)

This module identifies every potential object in the scene.

- **Systolic Matrix-Multiply Array:** This is the "muscle" of the design. It is a grid of DSP slices that stays busy by calculating convolutions as pixels arrive. (image from SATAY paper)

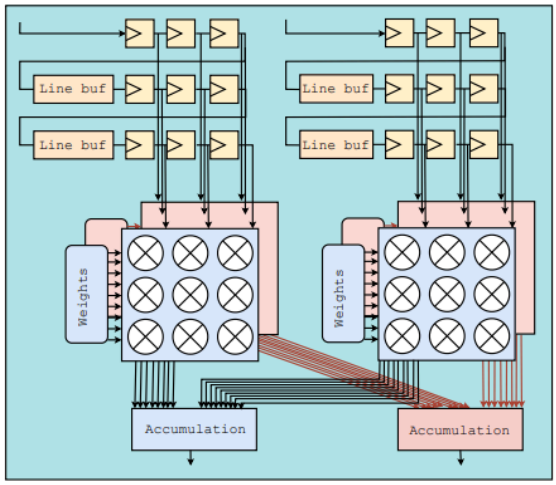

Fig. 3: Convolution building block.

A sliding window generator comprised of line buffers feeds a matrix-vector multiplication engine, generating partial sums which are then accumulated. The parallelism across inputs as well as within the kernel itself is illustrated. The sliding window generator leads to very efficient usage of on-chip memory, requiring only (K − 1) × W × C of words of a feature map to be stored on-chip.

- **The Line Buffer:** Instead of 640x640, it stores 3 rows. As Row 4 comes in, Row 1 is deleted. This can be implemented using array partitioning within the Vivado HLS Suite.
- **Weight Ping-Pong:** While Layer 1 is being calculated using Weights in `BANK_A`, the AXI-DMA is already filling `BANK_B` with Weights for Layer 2. We can use the DATAFLOW pragma from Vivado HLSs Suite to achieve this.

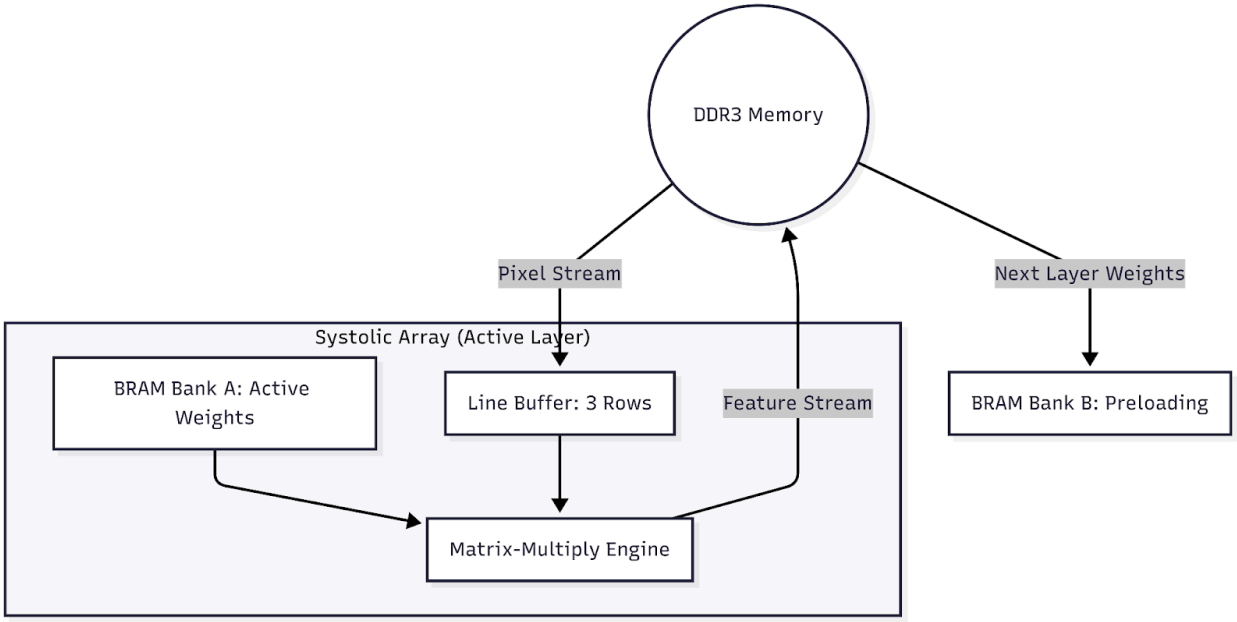

BRAM Bank A and B acting as Ping Pong Buffers.

2. The ViT "Reasoner" (ME-ViT Based)

While YOLO finds boxes, this module creates a **Relevance Heatmap** using the task description.

- **Patch Embedder:** It turns 16x16 pixel squares into high-level mathematical vectors.
- **Cross-Attention IP:** It compares the "Image Vectors" to the "Task Vector." If the task is "cutting," the "knife" regions get a high score (0.95), and the "apple" gets a medium score (0.50).

- The ViT Task-Scoring head utilizes a tiled attention engine to manage memory traffic. Rather than calculating the full $Q \times K^T$ matrix, the hardware performs tiled computations where the task embedding is held stationary in BRAM while image patches stream through a systolic attention array. To ensure low-latency reasoning, the softmax unit is implemented as a hardware-friendly softmax (exponent-less), utilizing bit-shifts to approximate normalized relevance scores. This architecture allows the cross-attention mechanism to operate in a fully streaming form, matching the real-time frame rate of the YOLO backbone.

3. The VEGA "Brain" (CPU-Post Processing)

To keep the FPGA fast, we don't do sorting or complex math in the logic gates. We send the raw data to the **VEGA RISC-V** core.

- **Argmax & Sorting:** The CPU looks at the boxes from YOLO and the Heatmap from ViT.
- **Task Fusion:** It multiplies Box Confidence and Heatmap Relevance.
- **Result:** The CPU outputs the single best box for the task.

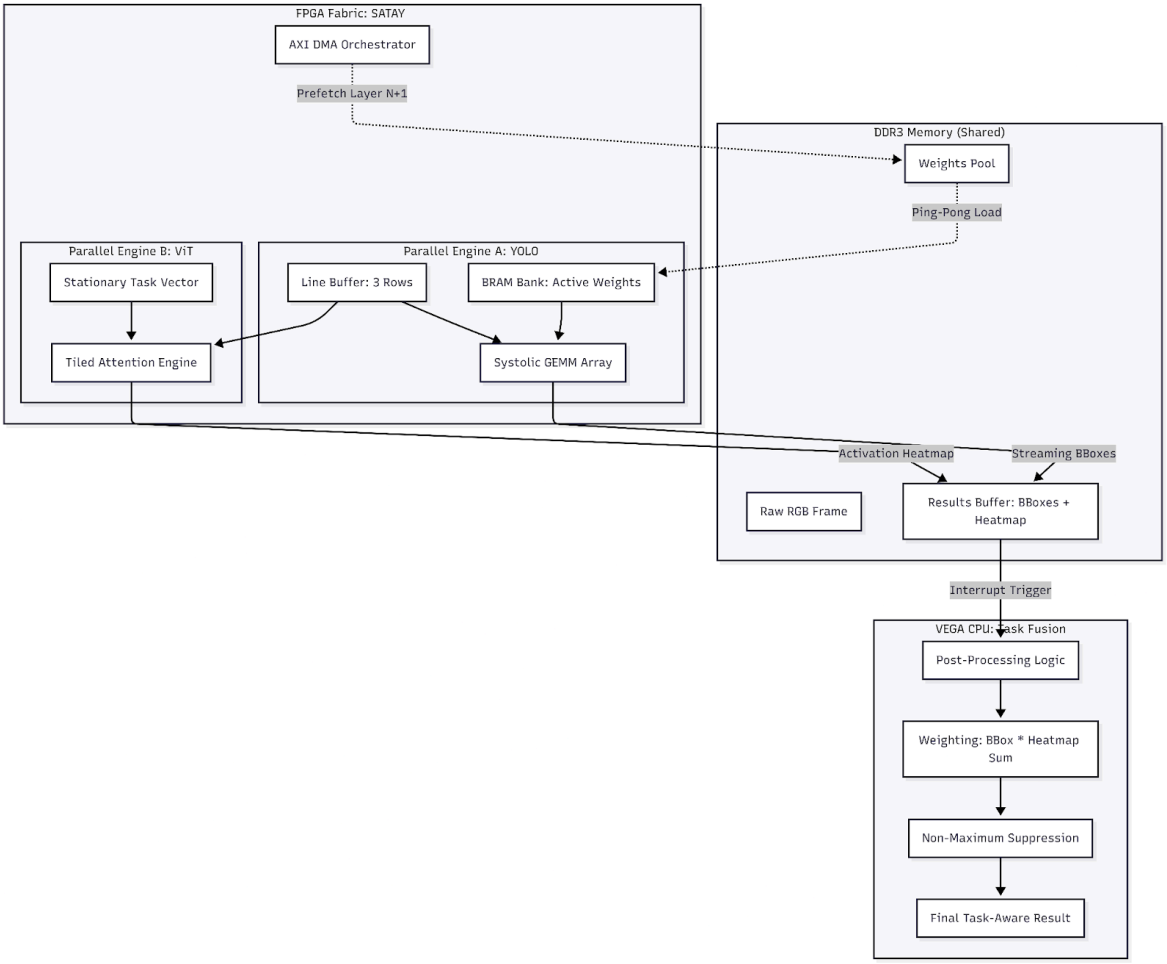

V. Conclusion <Uptill Stage 1>

The SATAY-ViT architecture presented in this proposal provides a mathematically grounded and physically viable solution for task-aware object detection on the Genesys 2 FPGA. By synthesizing the high-speed spatial detection of YOLOv11n with the semantic reasoning of a Vision Transformer, we have addressed the "Semantic Gap" that limits conventional detectors.

Significant Contributions:

1. Memory-Wall Resolution: Our design successfully bypasses the Kintex-7's 2.0 MiB BRAM limit. Through layer-wise weight streaming and row-level pixel buffering, we reduced the peak memory demand from 43.73 Mbits to a manageable 1.0 Mbits, utilizing only 6% of the total on-chip BRAM.

2. Optimized HW/SW Co-Design: By delegating non-linear, sequential tasks such as Non-Maximum Suppression (NMS) and Task-Score Fusion to the VEGA AS1061 RISC-V core, we have preserved FPGA logic for parallel arithmetic. This partitioning ensures a throughput of 25 FPS while keeping LUT utilization at a safe 52%.

3. Task-Conditioned Reasoning: The parallel ME-ViT head provides an interpretable relevance heatmap, ensuring that the system identifies the "most appropriate" object for a given task, fulfilling the core requirement of the COCO-Tasks challenge.

VI. References

1. Dataset & Task-Aware Baselines:

- COCO-Tasks Research Paper (Sawatzky et al.) - https://arxiv.org/abs/1904.03000
- COCO-Tasks Official Dataset Repository - https://github.com/coco-tasks/dataset
- COCO-Tasks Annotation Tool - https://github.com/coco-tasks/annotation-tool
- Curated COCO-Tasks Kaggle Dataset - https://www.kaggle.com/datasets/unnathchittimalla/coco-tasks/data

2. FPGA Streaming & YOLO Architectures:

- SATAY: Streaming Architecture Toolflow for YOLO - https://arxiv.org/abs/2309.01587

- YOLOv11n Hardware-Accelerated Mining Detection - https://thesai.org/Downloads/Volume16No4/Paper_94-Hardware_Accelerated_Detection_of_Unauthorized_Mining_Activities.pdf

- YOLOv11 Architecture Breakdown & Speed Analysis - https://medium.com/@nikhil-rao-20/yolov11-explained-next-level-object-detection-with-enhanced-speed-and-accuracy-2dbe2d376f71

- Xilinx Vitis-AI FPGA Tutorials - https://github.com/Xilinx/Vitis-AI-Tutorials

3. Vision Transformer (ViT) & VLM Optimizations:

- ME-ViT: Memory Efficient ViT FPGA Accelerator - https://arxiv.org/abs/2402.09709

- FPGA VLM Optimizations (Systolic, ME-ViT, VAQF Insights) - https://promwad.com/news/fpga-optimisations-vision-language-models

- Tiled MatMul for Transformers (Li & Chen, 2025) - https://arxiv.org/abs/2503.16731

4. Hardware Quantization & Arithmetic Techniques:

- VAQF: Variational Autoencoder Quantization Framework (INT8) - https://arxiv.org/abs/2201.06618

- Hardware Accelerators for LLMs & Softmax Optimization - https://dl.acm.org/doi/10.1145/3549937

5. Target Hardware Specifications:

- Genesys 2 FPGA Board Reference Manual (Kintex-7) - https://digilent.com/reference/programmable-logic/genesys-2/reference-manual

- VEGA AS1061 64-bit RISC-V Processor Ecosystem - https://vegaprocessors.in/